MDF
CABLE BUS SYSTEMS

Industrial, Commercial, Utility

- 600V, 5Kv, 15Kv and Larger
- 400 Amps to 6000 Amps

Revision 2

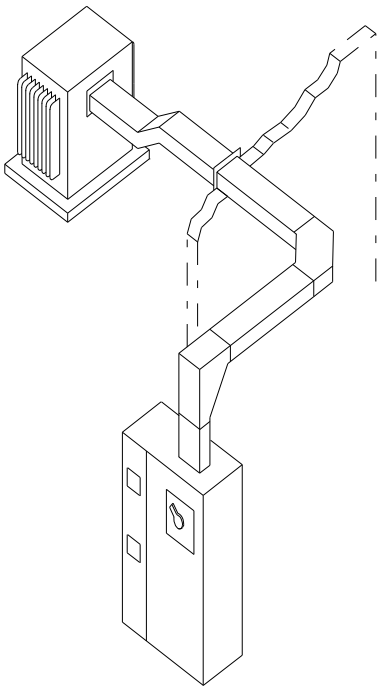

From Service Entrance...

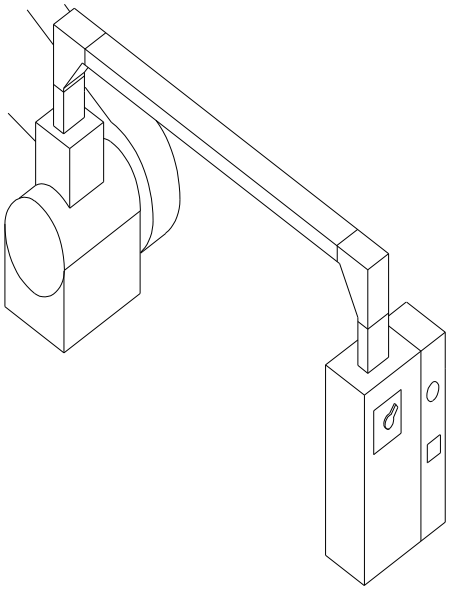

To Machine & Motor Feeders

Even Office Risers

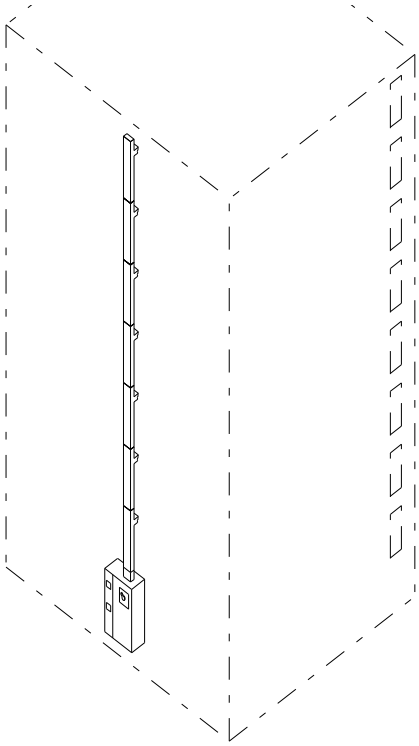

MDF Cable Bus Systems are the most reliable, safe, cost effective system chosen for these and many others;

Plant Distribution
Primary & Secondary Feeders
Chemical Plants
Industrial Plants
Food Processing Plants
Convention Centers
Testing Facilities
Hospitals
Airports
Shopping Malls
Sports Complexes

And many more !!

From Outdoor to Indoor let us show you why MDF Cable Bus is your most powerful option.

CABLE BUS SYSTEMS

Table of Contents

Index	3
What is Cable Bus?	4
Advantages of Cable Bus Systems	5
Advantages of MDF Cable Bus Systems	6
Cable Bus Industries & Customers	7
Advantages of MDF Cable Bus Systems	8
Take Off Example	9
Cable Bus Cross Sections	10
600V System Configurations	11
5 & 15 KV System Configurations	12
Cable Bus 90 Deg Horizontal Fitting Outlines	13
Cable Bus 90 Deg Vertical Fitting Outlines	14
Cable Bus Accessories	15-16
Cable Information	17
Engineering Information	18-20
MDF Cable Bus Specification	21-22
MDF Quotation Fill-In	23

MDF Cable Bus Systems

MDF Cable Bus Systems

MDF Cable Bus Systems was started in July of 1989 by the owner Barry Schuster. Since that time we have been providing quality, engineered Cable Bus Systems to our customers for over 20 years and continue to do so to this day.

History of Cable Bus

Cable Bus has been proven to be the safest, most reliable electrical power feeder system for over 50 years. Electric Utilities were the first to recognize the merits of Cable Bus Systems and utilize this economical system extensively throughout electrical generating plants from station power to motor feeders and even generator leads in some special applications.

In 1969 Cable Bus was introduced into the National Electric Code in article 365 and was changed to article 370 in the 2002 edition. Since its introduction Industrial plants have used Cable Bus from service entrance applications to feeders for larger motors, machines, induction furnaces, and for primary and secondary feeders in plant electrical distribution.

Commercial applications for Cable Bus are also growing. Service entrances, power distribution feeders for large shopping malls, office buildings, sports complexes, convention centers and hospitals are just the beginning of the commercial applications for Cable Bus.

What is Cable Bus?

There are many individuals and companies that have never even heard of cable bus, of those the majority of them still use bus bar systems. Cable Bus is the most reliable electrical power feeder system in today's market. Cable Bus employs fully insulated electrical conductors to carry currents between 400 to 6000 amps per phase at voltage levels typically from 600 volts up to 15 KV and higher. Cable Bus Systems are engineered for indoor and outdoor applications even in the most extreme conditions. MDF Cable Bus Systems currently has installations within the frigid North Slopes of Alaska and in the more hotter environments of Sabiya Kuwait.

Cable Bus Systems use single conductor cables which are protected in a fully ventilated enclosure and supported with cable support blocks at standard intervals as indicated within the NEC article 370. The support blocks maintain the cables at a fixed spacing and phasing arrangement to ensure a balanced current system, while at the same time providing support needed to withstand the high fault currents of electrical power systems. After the enclosure has been completely field installed the cables are then pulled into place in continuous lengths.

MDF Cable Bus Systems are totally engineered and are provided with complete installation drawings and instructions.

Cable Bus Advantages - Reliable, Safe, Cost Effective!

Reliable

- Fully insulated conductors offer high system reliability even in outdoor environments.
- Conductors are continuous from source to load eliminating intermediate splices and potential trouble spots.
- Systems are carefully designed to safely handle rated voltages and currents within specified temperature rise limitations.
- Ventilated enclosure eliminates hot spots and allows excellent cooling of conductors.
- Conductors are isolated from all metal parts.
- Polymer support blocks as well as fiberglass support blocks increase the life of the system.

Lowest Cost

- Material and Installation costs are low compared to other systems
- Ventilated enclosure and maintained cable spacing permits optimum system designs and minimizes conductor material
- Lightweight aluminum enclosure allows for ease of installation with no special lifting equipment required.
- Continuous conductors eliminate the expensive labor involved in splice joints
- No special installation tools are required.

Safe

- Totally insulated conductors reduce shock hazard.
- Ventilated enclosure guards against entry of foreign objects and protects cables from physical damage
- Designed to safely handle high short circuit currents
- Aluminum enclosure and high pressure splice joints provide excellent ground continuity No additional ground wire required for most systems

Enclosure

- Our standard enclosure is manufactured from a structural grade aluminum alloy which has excellent corrosion resistance and is far superior to painted steel products in industrial and outdoor environments.
- The aluminum enclosure also reduces electrical losses compared to steel enclosures.
- Enclosures are ventilated allowing the systems to run cooler thus utilizing less copper.

Flexibility

- System is very adaptable in joining or connecting to other equipment or other systems.
- Bus can be easily routed around obstructions or equipment.
- High salvage value. System can be dismantled and reused or rerouted.
- We have the capabilities to make fittings to any degree and radius, in addition to our standard designs.

Long Span

- Cable Bus Systems can be designed for up to 20 foot support spans thereby reducing support costs and installation labor.
- Straight section lengths available up to 24’ long.
- Enclosure is all welded construction for rigidity & strength .

Low Maintenance

- The system only has two connections points that need to be checked periodic ally.
- No enclosure heater requirements.
- The Cable Bus enclosure is made of Aluminum and hardware of stainless steel to withstand the elements.

Drawings

- In addition to the installation manual, a complete set of installation drawings are provided with every project..

MDF Cable Bus Advantages

MDF Cable Bus provides the customer with advantages starting from the quotation to the final design!

Rugged Enclosure

- MDF's Cable Bus enclosure side rails and block frames are made of 1/8" thick extruded aluminum which constitute the most rugged design available.
- Our standard rugged cable bus enclosure allows for large support spans of up to 20 ft in length unlike some competitors lighter designs.
- The 1/8" thick enclosure is suitable to be used as the equipment ground conductor unlike some competitors thinner designs.
- Enclosure is of welded construction with top covers installed after the cable is pulled into the system.

Cover Design

- MDF's unique cover design utilizes a special expanded metal for top & bottom covers.
- Our cable bus cover provides 50% of open area for cable ventilation resulting in a cooler system. The 50% open area is nearly double than some competitors designs.
- Not only does the cover offer greater ventilation but it also provides excellent protection from foreign objects. The openings are less than 5/16" diameter.
- Bottom Covers are welded in at factory

Easier Installation

- MDF Cable Bus systems do not require transpositions within the cable bus enclosure.
- Heavy Duty enclosure translates into less supports to install.
- MDF's Block frame design firmly holds in place the bottom block as well as middle and top blocks for easier installation of cable especially in vertical risers.
- MDF's Block frame design eliminates potential damage that can be caused from through bolt only designs which require through bolts to be installed to hold the blocks in place while pulling in the cable.
- MDF provide cut-to-size sections with additional length that can be cut on site for field adjustments.
- Contingency cable is supplied with every job in addition to an additional straight section to allow for unforeseen adjustments or field discrepancies.
- Cable support blocks have a chamfered bore to eliminate any undo stress or potential damage to the cable.

Unit Pricing

- MDF Cable Bus provides unit pricing for components of the system and even offers pricing for optional equipment if needed.
- Unit pricing allows the buyer to follow the cost impacts of additions or deletions as they are almost a certainty from the initial bid stage to the final bill of materials at shipment.
- Some competitors simply provide lump sum pricing not allowing the customer to track the cost impact but making the customer go back for a re-quote as changes develop thru the design phase.

Payment Terms

- MDF cable bus payment Terms are Net 30 days after shipment of materials.
- Some competitors require payment as soon as they are awarded the purchase order. MDF will issue the invoice at the time of shipment.
- Some competitors also require payment prior to fabrication. Some require payment of up to nearly 70% of the project prior to shipment of any materials.
- These pre-payments coupled with lump sum pricing can create a costly surprise with little recourse.

Bus Terminations

- MDF cable bus provides sufficient cable to complete the terminations. Our standard quotation provides 7 ft at each end for terminations. Although if your design requires longer lengths these can be provided. Some competitors do not provide adequate cable lengths to make the terminations.
- MDF provides bus bar adapters to accommodate additional lugs or to maintain the bending radius.

Bill of Material Take-Off

- MDF's bill of material footages are taken through the centerline of the fitting. Thus providing an accurate tabulation of the horizontal and vertical lengths of the systems. (see page 9 for example take-off)
- Some competitors count their footage from fitting splice to fitting splice rather than thru the centerline.
- Fitting prices listed on our bill of materials are simply the additional material and labor associated with a fitting.

MDF Cable Bus Customers and Industries

Metals & Mining:

- AK Steel
- Bethlemhem Steel
- Commonwealth Aluminum
- CCL Container
- Crucibal Metals
- Ervin AMA Steel
- GRD Steel
- Haverhill Coke
- Holman Cement
- IPSCO Steel
- Kennecott Aluminum
- Koch Nitrogen
- Ormet
- PSC Nitrogen
- Schultz Steel
- SGL Carbon
- Sid Richardson
- Tile Cera
- US Steel
- Weirton Steel
- Wheatland Tube

R&D, Bio Fuels:

- Abbot Labs
- ADM
- Bayer Crop Science
- Bettis Atomic Test Labs
- Fermi Accelerator Labs
- Kennedy Space Center
- NASA Mission Control Houston
- Oak Ridge National Labs

Data Centers & Communications

- AT&T
- Compass Bank
- IBM
- GTE
- PACBELL
- Southwest Bell
- QTS
- Verizon

Utilities—Power Generation

- AEP
- Ameren
- Alabama Power
- Allegheny Port Authority
- Basin Electric Power Coop
- Devon Power
- Duke Energy
- Entergy
- Gateway Energy
- GE Energy
- Gemma Power
- Georgia Power
- Gulf Power
- Kansas City Power & Light
- Mirant
- Mississippi Power
- Montegomery Energy
- NRG Energy
- Ocean State Power
- Reliant Energy
- TVA
- TXU Energy
- Westar Energy
- White Mountain Energy

Petro-Chem:

- BP Products
- CITGO
- Conoco-Phillips
- Constar Plastics
- Dow
- DuPont
- Exxon Mobile
- Flint Hills Resources
- Forest Oil
- Kureha-Dupont
- Marathon Ashland
- Occidental Chemical
- PetroLogistics
- Phillips-ARCO
- Shell
- Tosco Refining
- Ultrmar Refining Williams Gas
- Valero Refining

Engineering Firms:

- Alaska Anvil
- Ampirical Solutions
- BE&K
- Bechtel
- Black & Veatch
- Burns & McDonald
- Centerline
- CH2M Hill
- Colt
- Emerson Process Management
- Fluor
- GDS
- Gensler
- Hilbert
- Industry Energy & Associates
- Jacobs
- Keay
- Kellogg Brown & Root
- Lockwood Greene
- Mustang
- Pegasus TSI
- Professional
- Raytheon,
- Sargent & Lundy
- Sigma Energy Solutions
- Shaw Group
- Technip
- TIC
- Turtle & Hughes
- United
- Washington Group
- Watkins
- Worley Parsons

Pulp & Paper

- Appleton Papers
- Buckeye Technologies
- Champion International
- Galt Packaging
- Kimberly Clark
- Mead Paper
- Union Camp
- US-Gypsum

For a more complete list of customers including customer contacts, contact the factory.

MDF Cable Bus Advantages

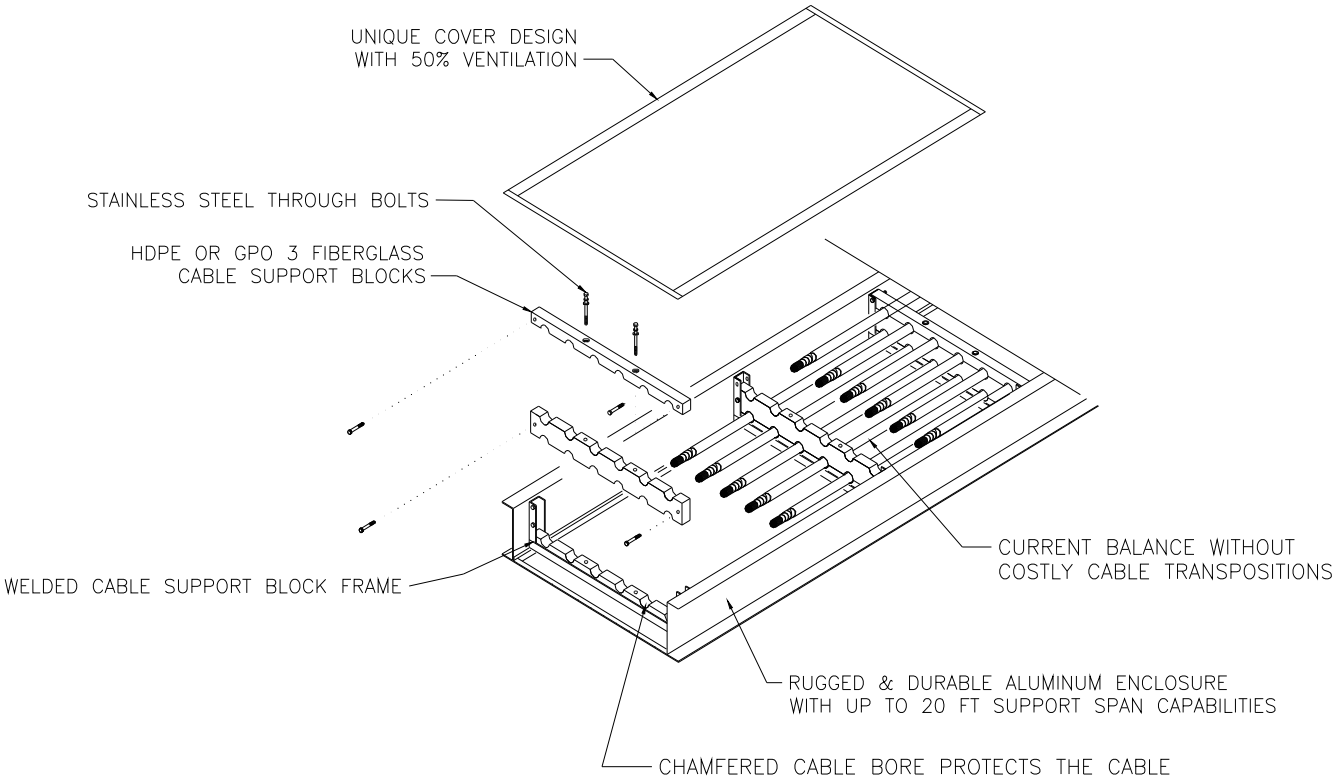

MDF Cable Bus Take Off Example

TAKE OFF PROCEDURE:

1. HORIZONTAL AND VERTICAL FOOTAGE IS MEASURED THROUGH THE CENTER LINE OF THE BUS RUN FROM FLANGE TO FLANGE, THROUGH ALL FITTINGS/ELBOWS. THE TOTALS FOR EACH ARE THEN ROUNDED UP TO THE NEAREST FOOT. THIS DETERMINES THE TOTAL FOOTAGE OF CABLE BUS ENCLOSURE NEEDED.

2. QUANTITIES FOR OTHER COMPONENTS SUCH AS FITTINGS/ELBOWS, WALL SEALS, TERMINATIONS, ETC. ARE DETERMINED, AS REQUIRED. PLEASE NOTE THAT BILL OF MATERIAL PRICING SHOWN FOR FITTINGS/ELBOWS IS ONLY FOR THE ADDITIONAL LABOR AND MATERIAL COSTS FOR EACH FITTING/ELBOW.

3. ALL FOOTAGES AND COMPONENTS ARE THEN COMPLIED & ITEMIZED PER BUS RUN(S) IN AN OVERALL BILL OF MATERIAL. REFER TO EXAMPLE BILL OF MATERIAL BELOW.

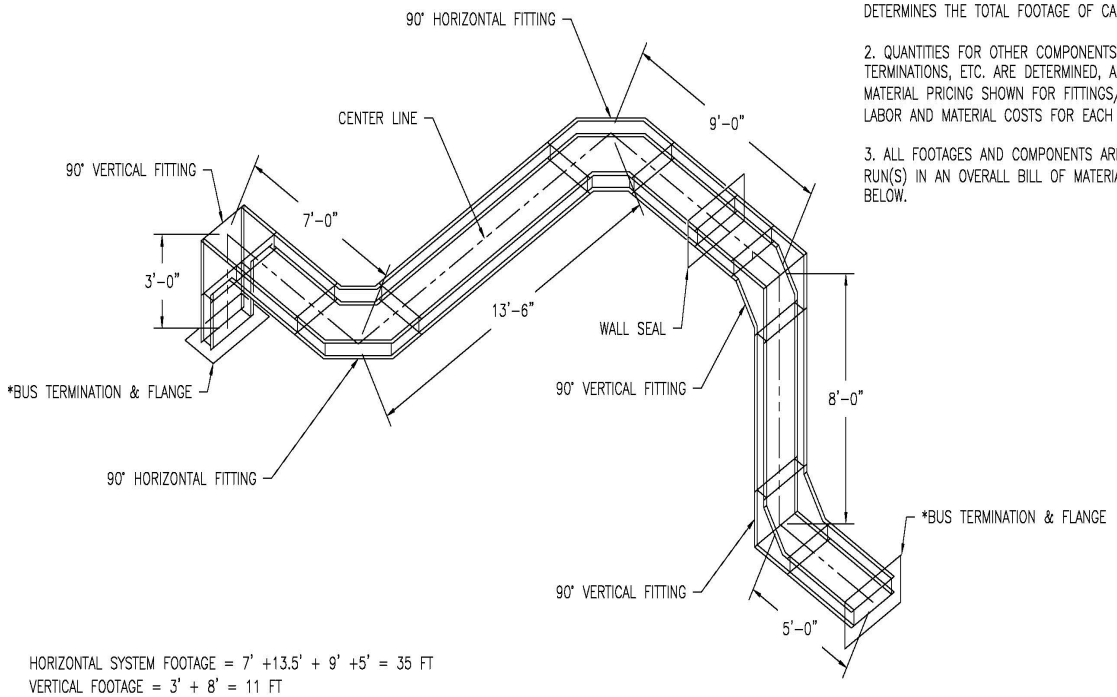

HORIZONTAL SYSTEM FOOTAGE = 7' +13.5' + 9' +5' = 35 FT
VERTICAL FOOTAGE = 3' + 8' = 11 FT

*DENOTES:

BUS TERMINATIONS INCLUDE MOUNTING FLANGE, ADDITIONAL CABLE LEADS TO CONNECT TO EQUIPMENT TERMINALS, NEMA 2-HOLE COMPRESSION LUGS & HIGH VOLTAGE TERMINATION KITS (HVT KITS ARE ONLY APPLICABLE FOR MEDIUM AND HIGH VOLTAGE SYSTEMS).

EXAMPLE BILL OF MATERIAL FOR BUS RUN ABOVE			
QTY.	DESCRIPTION	UNIT COST	EXT. COST
35	HORIZONTAL SYSTEM FOOTAGE	$100/FT	$3450
11	VERTICAL SYSTEM FOOTAGE	$125/FT	$1375
2	90 DEG. HORIZONTAL FITTING	$250/EA	$500
3	90 DEG. VERTICAL FITTING	$200/EA	$600
1	WALL SEAL	$300/EA	$300
2	BUS TERMINATION & FLANGE	$600/EA	$1200

NOTE: UNIT PRICING ABOVE IS FOR EXAMPLE ONLY.

MDF CABLE BUS SYSTEMS
www.mdfbus.com
4465 Limaburg Road
Hebron, Ky 41048

EXAMPLE TAKE OFF PROCEDURES & BILL OF MATERIALS CABLE BUS RUN

REFERENCE NUMBER:	DRN. RSH	09/04/2013	SCALE: N/A	SPEC. NO. XXX
	CHKD. MAM	09/04/2013		
	APPR. SHN	09/04/2013	DWG. NUMBER: TO-CB-01	REV. 0
	PROJECT NUMBER: 213-XXXXX			

Copper Conductor Cable Bus Cross Section Figures

Please refer to the system configurations on pages 11 & 12 for corresponding amperage and voltage ratings. Aluminum conductor configurations as well as others are available, consult factory for your specific application.

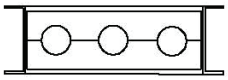

Figure A

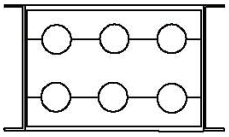

Figure B

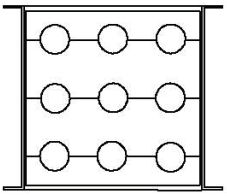

Figure C

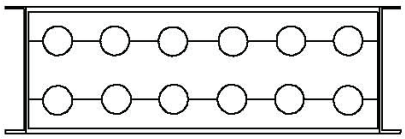

Figure D

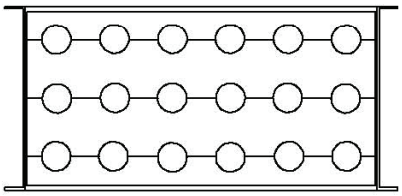

Figure E

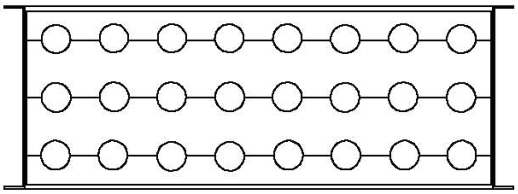

Figure F

600 V - Copper Conductor Cable Bus Systems

75 ° C Operating Temperature
- 40° C Ambient Temp

FIGURE	AMPACITY	CONDUCTOR SIZE (MCM)	# CABLES/ PHASE	ENCLOSURE DIMENSIONS (Nominal)	ENCLOSURE DIMENSIONS (Overall)
A	600	500	1	6” H x 12” W	6.25” x 15.5”
B	800	350	2	6” H x 12” W	6.25” x 15.5”
B	1000	500	2	6” H x 12” W	6.25” x 15.5”
B	1200	600	2	6” H x 12” W	6.25” x 15.5”
B	1200	750	2	6” H x 12” W	6.25” x 15.5”
**C	1600	500	3	6” H x 12” W	6.25” x 21.5”
**C	1800	600	3	6” H x 12” W	6.25” x 21.5”
*D	2000	500	4	6” H x 24” W	6.25” x 27.5”
*D	2500	750	4	6” H x 24” W	6.25” x 27.5”
*E	3200	500	6	8” H x 24” W	6.25” x 27.5”
*E	3500	600	6	8” H x 24” W	8.25” x 27.5”
*E	4000	750	6	12” H x 24” W	12.25” x 27.5”
**F	5000	750	8	12” H x 24” W	12.25” x 27.5”
**	6000	750	9	12” H x 30” W	12.25” x 33.5”

600 V - Copper Conductor Cable Bus Systems

- **90 °** C Operating Temp
- 40° C Ambient Temp

FIGURE	AMPACITY	CONDUCTOR SIZE (MCM)	# CABLES/ PHASE	ENCLOSURE DIMENSIONS (Nominal)	ENCLOSURE DIMENSIONS (Overall)
A	600	500	1	6” H x 12” W	6.25” x 15.5”
A	800	750	1	6” H x 12” W	6.25” x 15.5”
A	1000	350	2	6” H x 12” W	6.25” x 15.5”
B	1200	500	2	6” H x 12” W	6.25” x 15.5”
B	1600	750	2	6” H x 12” W	6.25” x 15.5”
**C	1800	500	3	6” H x 18” W	6.25” x 21.5”
*D	2000	500	4	6” H x 24” W	6.25” x 27.5”
*D	2500	500	4	6” H x 24” W	6.25” x 27.5”
*D	3000	750	4	6” H x 24” W	6.25” x 27.5”
*D	3500	500	6	8” H x 24” W	8.25” x 27.5”
*E	4000	750	6	12” H x 24” W	12.25” x 27.5”
**	5000	750	7	12” H x 24” W	12.25” x 27.5”
**F	6000	750	8	12” H x 30” W	12.25” x 33.5”

* 18 “ Wide Enclosure for 3-wire systems
* 24 ” Wide Enclosure for 4-wire systems
** Consult Factory for specific cross section design.

5KV - Copper conductor Cable Bus Systems:

90 Deg C Operating Temperature
- 40 DEG C Ambient Temp

FIGURE	AMPACITY	CONDUCTOR SIZE (MCM)	# CABLES/ PHASE	ENCLOSURE DIMENSIONS (Nominal)	ENCLOSURE DIMENSIONS (Overall)
A	600	500	1	6” H x 12” W	6.25” x 15.5”
A	800	750	1	6” H x 12” W	6.25” x 15.5”
A	1000	1000	1	6” H x 12” W	6.25” x 15.5”
B	1200	500	2	6” H x 12” W	6.25” x 15.5”
B	1600	750	2	8” H x 12” W	8.25” x 15.5”
**C	1800	500	3	6” H x 18” W	6.25” x 21.5”
D	2000	500	4	6” H x 24” W	6.25” x 27.5”
D	2500	500	4	6” H x 24” W	6.25” x 27.5”
D	3000	750	4	8” H x 24” W	8.25” x 27.5”
D	3500	750	4	8” H x 24” W	8.25” x 27.5”
E	4000	750	6	12” H x 24” W	12.25” x 27.5”
E	4500	750	6	12” H x 24” W	12.25” x 27.5”
**	5000	750	7	12” H x 24” W	12.25” x 27.5”
**F	6000	750	8	12” H x 30” W	12.25” x 33.5”

15KV - Copper conductor Cable Bus Systems:

90 Deg C Operating Temperature
- 40 DEG C Ambient Temp

FIGURE	AMPACITY	CONDUCTOR SIZE (MCM)	# CABLES/ PHASE	ENCLOSURE DIMENSIONS (Nominal)	ENCLOSURE DIMENSIONS (Overall)
A	600	500	1	6” H x 12” W	6.25” x 15.5”
A	800	750	1	6” H x 12” W	6.25” x 15.5”
A	1000	1000	1	6” H x 12” W	6.25” x 15.5”
B	1200	500	2	8” H x 12” W	8.25” x 15.5”
B	1600	750	2	8” H x 12” W	8.25” x 15.5”
**C	1800	500	3	8” H x 18” W	8.25” x 21.5”
D	2000	500	4	8” H x 24” W	8.25” x 27.5”
D	2500	500	4	8” H x 24” W	8.25” x 27.5”
D	3000	750	4	8” H x 24” W	8.25” x 27.5”
D	3500	750	4	8” H x 24” W	8.25” x 27.5”
E	4000	750	6	12” H x 24” W	12.25” x 27.5”
E	4500	750	6	12” H x 24” W	12.25” x 27.5”
**	5000	750	7	12” H x 24” W	12.25” x 27.5”
**F	6000	750	8	12” H x 32” W	12.25” x 35.5”

NOTE: 600V, 5KV & 15KV System configurations shown are for 3 phase/3 wire systems. For other configurations including 4 wire, single phase, DC , multi-circuit and aluminum conductor systems consult the factory.

Fitting Outline Drawings - 90 Deg Horizontal

NOTE: Standard Outline Drawings Shown.

600 Volt Systems: 18” radius fittings are typical. If space is limited, depending on the cable diameter, 12” radius fittings or smaller can be used.

5 & 15KV Systems: 24” radius fittings are typical. If space is limited, depending on the cable diameter 21” or 18” radius fittings can be used.

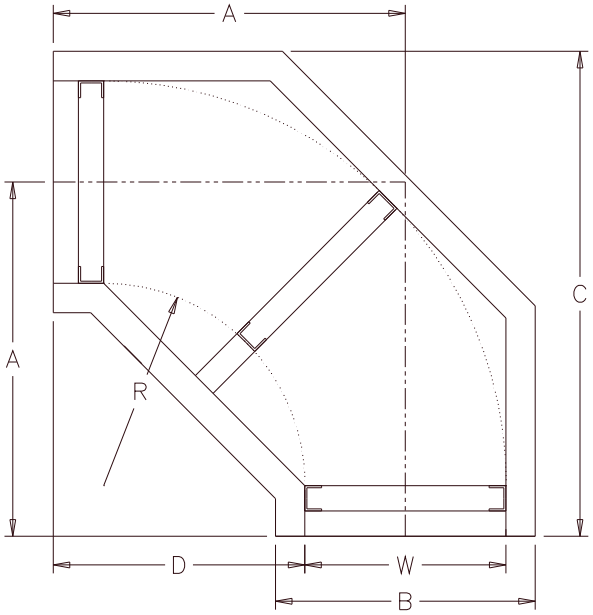

(W) Width	(R) Radius	A	B	C	D
12”	12”	21”	15 ½”	28 ¾”	15”
	15”	24”	15 ½”	31 ¾”	18”
	18”	27”	15 ½”	34 ¾”	21”
	21”	30”	15 ½”	37 ¾”	24”
	24”	33”	15 ½”	40 ¾”	27”
18”	12”	24”	21 ½”	34 ¾”	15”
	15”	27”	21 ½”	37 ¾”	18”
	18”	30”	21 ½”	40 ¾”	21”
	21”	33”	21 ½”	43 ¾”	24”
	24”	36”	21 ½”	49 ¾”	27”
21”	12”	25 ½”	24 ½”	37 ¾”	15”
	15”	28 ½”	24 ½”	40 ¾”	18”
	18”	31 ½”	24 ½”	43 ¾”	21”
	21”	34 ½”	24 ½”	47 ¾”	24”
	24”	37 ½”	24 ½”	50 ¾”	27”
24”	12”	27”	27 ½”	40 ¾”	15”
	15”	30”	27 ½”	43 ¾”	18”
	18”	33”	27 ½”	46 ¾”	21”
	21”	36”	27 ½”	49 ¾”	24”
	24”	39”	27 ½”	52 ¾”	27”

Fitting Outline Drawings - Inside & Outside 90 Deg Vertical

NOTE: Standard Outline Drawings Shown.

600 Volt Systems: 18” radius fittings are typical. If space is limited, depending on the cable diameter, 12” radius fittings or smaller can be used.

5 & 15KV Systems: 24” radius fittings are typical. If space is limited, depending on the cable diameter 21” or 18” radius fittings can be used.

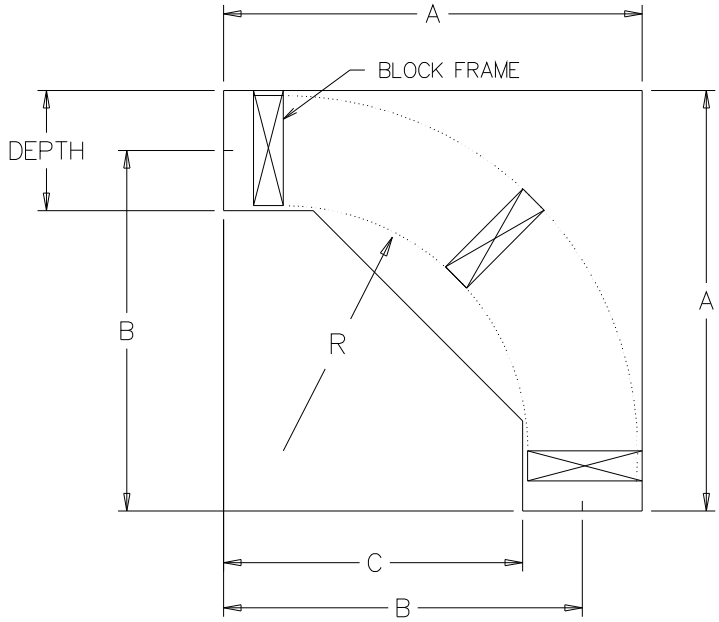

Depth	(R) Radius	A	B	C
6”	12”	21”	18”	15”
	15”	24”	21”	18”
	18”	27”	24”	21”
	21”	30”	27”	24”
	24”	33”	30”	27”
8”	12”	23”	19”	15”
	15”	26”	22”	18”
	18”	29”	25”	21”
	21”	32”	28”	24”
	24”	35”	31”	27”
12”	12”	27”	21”	15”
	15”	30”	24”	18”
	18”	33”	27”	21”
	21”	36”	30”	24”
	24”	39”	33”	27”

Cable Bus System Components

Horizontal Elbow

- Horizontal elbows are used to make changes in direction as required. Our standard fittings come in 15, 30, 45, 60 & 90 degrees. Although we are not limited to only these designs, we can manufacture nearly any degree fitting necessary for the project.

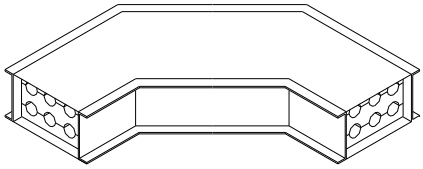

Vertical Elbow

- Vertical Elbows are used to make changes in the vertical direction as required. Again our standard degree fittings are 15,30,45,60 & 90. Whether the job requires a straight vertical drop or a small vertical offset we can manufacture just about any degree fitting that would suit your needs.

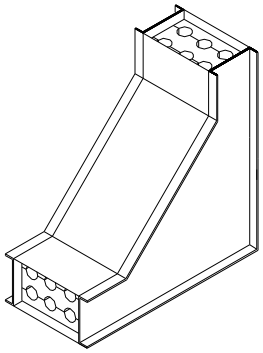

Tap Box

- Tap Boxes are supplied to make taps from main bus runs to intermediate loads or bus ties. These aluminum boxes can be supplied for indoor or outdoor use.

Splice Box

- Splice Boxes are supplied to make splices from main bus runs to lower amperage cable bus runs.. These aluminum boxes can be supplied for indoor or outdoor

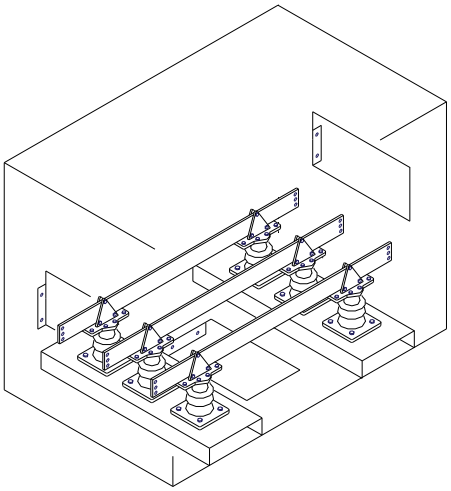

Additional Cable Bus System Components

Entrance fitting (Box Connector, Environmental Seal)

- These entrance fitting plates are supplied at indoor equipment entrances. They consist of our aluminum connector plate and block set mounted to the plate at the factory.
- Entrance fittings are also supplied for wall penetrations to create an environmental wall seal.
- Fire rated wall penetrations, up to 4 hours are also available.

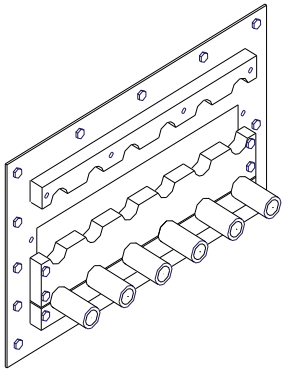

Outdoor Vertical Bus Seal (Water Tight)

- For entrance fittings in the outdoor environment additional protection is required from the elements. For this reason we provide these water tight penetrations . These are the perfect solution for sealing entrances into outdoor equipment. We provide a one piece gasket to seal our aluminum plate to the equipment along with cable seals to seal the cable entry into the equipment. Combined these create a water tight seal.

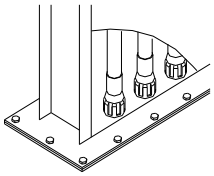

Transition Box (Pull Box, Top Hat, Termination Box)

- Transition Boxes are supplied at termination locations which do not have the necessary space for traditional fittings nor the required space for cable terminations.
- These boxes are angle frames with removable covers for access to the cables. The face of the box to which the cable bus enters will be welded to the box frame. These boxes do not contain copper bus bars or braids.
- Designs will vary based upon application, cable bus entry can be made from any side not just the top as the example shoes.
- Outdoor Boxes are constructed with gaskets for removable covers and fixed covers are seam welded.

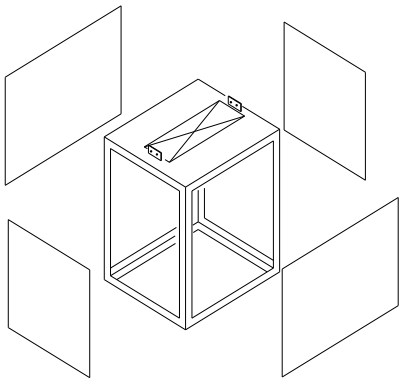

Cable Connections

- For cable terminations we provide long barrel two hole NEMA compression lugs.
- For High voltage systems we provide Heat shrink High voltage Terminations cold shrink variations are also available.
- Occasionally the need arises for bus bars to aid in the termination of the conductors., these can also be supplied..

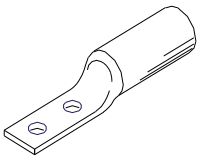

MDF Cable Bus Systems - Engineering Information

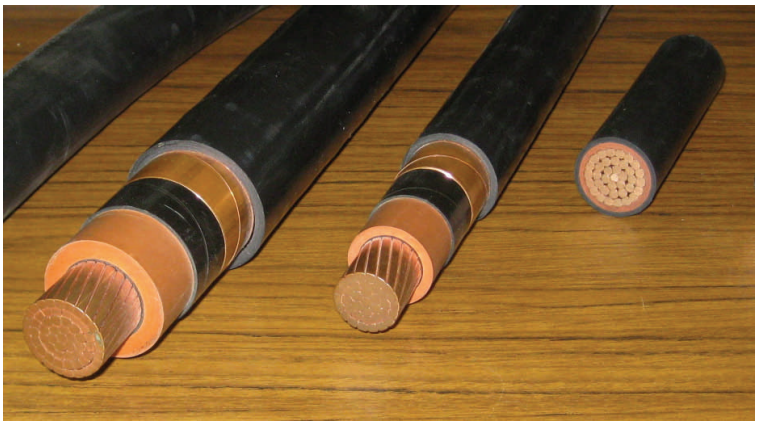

Cables

General:

The main consideration in any cable bus system is the proper selection of power conductors. MDF uses only the highest quality cables, pre-tested and designed for use in cable bus systems within indoor or outdoor environments.

Conductors may be copper or aluminum and are typically supplied with an insulation temperature rating of 90º C. Conductors are sized in accordance with NEC & ICEA tables in addition to heat rise tests.

Insulation:

Cross-linked Polyethylene (XLP or XLPE). This is the most economical type of insulation. XLP has excellent resistance to most chemicals and is very resistant to physical damage.

Ethylene Propylene Rubber (EPR) is recommended for all systems rated above 2000 volts. This insulation is superior to XLP in most categories and results in a more reliable system, particularly in outdoor and wet environments.

Shielding:

Shielding is recommended on all systems over 2000 volts. A grounded shield does several things for the power cable:

1. Confines the dielectric field within the cable.
2. Provides a uniform stress distribution within the dielectric
3. Protects the cable from induced potentials.
4. Limits ratio interference.
5. Reduces shock hazard.
6. Provides a ground path for leakage and fault currents.

MDF Cable Bus Systems - Engineering Information

Voltage Drop & Power Loss

MDF Cable Bus Systems have low impedance characteristics which reduces power consumption as well as minimize the systems voltage drop. The actual voltage drop and power loss will of course depend on the specific Cable Bus System.

The typical system will have a 2 to 3 volt (line to line) Voltage drop per 100 feet, at rated current. Computer analysis and printouts are available for each project detailing this information. If you have specific questions regarding voltage drop or power loss, please consult the factory.

Parallel Conductors & System Balance

Cable Bus systems take advantage of efficiency of using two or more conductors per phase in larger rated power systems. As cable size increases the ampacity per circular mil decreases. This is due primarily to the “skin” effect or current distribution within the cable and the decrease in heat radiating ability per cross section area as the cable size increases.

The current density is highest at the outer surface of the cable. Two smaller cables will have more surface area than one large cable of equal total conductor material and will therefore, most often be more efficient. The efficiency of paralleling conductors is not without certain potential problems. When two or more cables are paralleled per phase one might assume that the total current would automatically divide equally between these paralleled conductors. This is definitely not automatic.

Due to inductive coupling between conductors, the total impedance of each conductor also depends on the physical geometry of the system. The mutual coupling between conductors is dependant on the spacing between conductors and the relationship of the phasing of each conductor in the system. Current division between improperly imbalanced systems can be as high as a 30 to 70 percent split (in a two conductor system)

One undesirable solution commonly offered to this problem is to transpose the cables within the cable bus system. Proper transposition techniques, however, would require five transpositions alone on a 2 cable per phase system.

The proper solution to this problem is to engineer each system to produce balanced conductor impedances through careful phasing and spacing arrangements of each conductor. Balance currents can be obtained for most systems through symmetrical cable arrangements.

MDF Cable Bus Systems - Engineering Information

Short Circuit Capacity

MDF Cable Bus Systems must withstand the forces created by a potential fault current of a power distribution system. Forces are created as unusually large currents are passed through the system during a fault condition. The forces are a function of the current magnitude of each conductor as well as the distance or spacing between conductors. Cables of opposite phases will be repelled while cables of like phases will be attracted. A simplified formula for forces between conductors is given below

$$\text{Force} = \frac{K(C1 \times C2)}{D}$$

K– constant; C1 = Current cable 1; C2= Current cable 2; D= distance between conductors

MDF Cable Bus Systems have been designed to withstand these forces. Cable support blocks firmly hold cables in place within the cable bus enclosure. Per the NEC article 370, blocks are spaced between 18 and 36 inches on centers depending on the required short circuit rating of the system (All vertical bus risers have support blocks spaced no larger than 18 inches on centers). The cable support blocks are completely framed and solidly secured to the enclosure to maximize the strength and make the system capable of withstanding these forces.

Cable Support Blocks

Cable support blocks can be supplied in either our standard High Density Polyethylene (HDPE) block or an optional fiberglass block. These support blocks have a chamfered bore to eliminate any sharp points damaging the cable when it is installed within the system. All blocks are manufactured from flame retardant, arc & track resistant materials which are also non hydroscopic as well as UV resistant. The cable support blocks are designed for indoor and outdoor environments.

MDF Cable Bus cable support blocks are manufactured from HDPE a high density polyethylene material or GPO -3 grade fiberglass material.

MDF Cable Bus Systems - Engineering Information

Grounding

As in any electrical system, it is important that Cable Bus Systems be properly grounded per article 250 of the National Electric Code. MDF Cable Bus Systems have high pressure splice joints between bus sections. These joints eliminate the need for bonding jumpers across bus sections.

Field Testing

It is mandatory to conduct insulation testing for every Cable Bus Systems prior to energizing. The cables should be completely installed, secured and terminated (but not yet connected to other equipment). The bus covers should also be in place.

600 Volt systems can be meggered to proof test the insulation. Higher voltage systems must be tested using DC high potential testing per IEEE 400 or other suitable standard.

Connectors & Terminations

Compression type connectors are supplied as standard. These are long barreled two hole NEMA spaced compression connectors. For high voltage systems, 5kv and above termination kits are also provided. Heat shrink or cold shrink type kits are available

Cable Bus Specification

General

This specification describes the electrical and mechanical requirements for metal enclosed Cable Bus Systems.

The system shall comply with Article 370 of the National Electric Code and shall be suitable for indoor or outdoor use.

The Cable Bus System shall be manufactured by: MDF Cable Bus Systems
4465 Limaburg Rd.
Hebron, KY 41048

The cable Bus System shall include all necessary straight sections, fittings, tap boxes, entrance fittings, conductors, cable connectors, cable terminations and other accessories required to form a complete system.

A complete set of drawings shall be supplied for each system to facilitate system design and installation.

Electrical Requirements

System Ratings:

System Voltage _____ (line to line)
Continuous current rating _____.
Frequency _____.
Short Circuit Rating _____.

All current carrying conductors shall be fully insulated and rated for the specified voltage. Cable insulation shall be rated for 90 º C operating temperature for the ampacity and voltage specified. Cable shall be suitable for indoor and outdoor use.

System voltage drop shall not exceed _____% line to line.

Conductor material shall be (copper) or (aluminum). Conductors shall be continuous, running the full length of the system. Conductors shall be installed in the cable bus enclosure after the enclosure has been completely installed in the field.

System ampacity shall be designed based on heat rise testing. Conductor temperature rise shall be limited to 50 º C over a 40 º C ambient temperature.

Current balance between paralleled conductors shall be insured by proper phasing and spacing arrangements between conductors. Transpositions of conductors to balance conductor currents is undesirable.

The cable Bus enclosure shall be grounded in accordance with NEC section 250.

Cable Bus Specification Continued

Mechanical Requirements

Enclosure:

The cable bus enclosure shall be manufactured from mill finish aluminum and suitable for indoor and outdoor use. Side rails, rungs and splice plates shall be manufactured from 6063-T6 or 6061-T6 aluminum alloy and shall be 1.8 inch thickness for maximum strength and maximum equipment ground conductor ratings.
The enclosure shall have ventilated top and bottom covers with a minimum of 50% open area for the passage of air to provide maximum cable cooling.
Cover ventilation openings shall not permit entry of a round rod measuring 5/16" in diameter. Top covers shall be removable.

The enclosure shall be designed to withstand the forces due to fault currents specified and shall be designed for a maximum support span of ___ ft. Outdoor bus shall also be designed to withstand environmental loads such as wind ice, and snow.

Enclosure splice joints shall utilize high pressure splined bolts to maximize strength and electrical continuity for grounding purposes.
All cable Bus hardware including splice plate, cable support block, and cover hardware shall be non-magnetic, stainless steel for maximum corrosion resistance and to minimize electrical losses.

Cable Support Blocks

Cable support blocks shall have a chamfered cable bore to eliminate any undo stress or damage to the cable insulation. The Cable Support block shall be manufactured from either;

1. High Density Polyethylene (HDPE) black, which is UV resistant and suitable for indoor and outdoor use.

2. Fiberglass laminate manufactured in accordance with NEMA grade GPO-3.

Support blocks shall be spaced to withstand the forces due to the specified fault currents but in no case spaced greater than 36 inches on centers for horizontal bus runs and 18 inches on centers for vertical risers.

MDF Cable Bus Request for Quotation Fill In Form

Requestors Name: _____
Requestors Company: _____
Address: _____
Phone: _____ Fax: _____
Email: _____

Project Name: _____
Location: _____
Owner: _____
Engineer: _____
Bid Date: _____ Ship Date: _____

Voltage: _____
Current Rating: _____
System Configuration:
_____ 3 Phase / 3 Wire
_____ 3 Phase / 4 Wire Full Neutral
_____ 3 Phase / 4 Wire Half Neutral
_____ 3 Phase / 4 Wire ____% Neutral
_____ Single Phase AC
_____ Two Pole DC
_____ Other

Ambient Temperature Other Than (40° C) _____
Cable Operating Temperature Other Than (90° C) _____

Conductor Material:
_____ Copper _____ Aluminum

600 Volt Cable Insulation:
_____XLP (XHHW-2) _____ Other

Enclosure Ground: _____ External Ground: _____

5 kV & 15 kV Cable Insulation:
_____ EPR _____ Other

Conductor Jacket Material:
_____ PVC _____ Other

Cable Bus Footage:
_____ Horizontal
_____ Vertical
_____ Total
_____ Number of Bus Runs

Quantities:
_____ Horizontal 90 Deg Elbow
_____ Horizontal 45 Deg Elbow
_____ Vertical 90 Deg Elbow
_____ Vertical 45 Deg Elbow
_____ Wall Seal (Environmental Seal)
_____ Fire Rated Wall Seal
_____ Tap Box (with Bus Bars & Insulators)
_____ Transition Box (Top Hat/Pull Box/Terminal Box)
_____Indoor Equipment Seal Plate
_____Horizontal Outdoor Equipment Seal Plate
_____ Vertical Outdoor Equip. Seal Plate (Water Tight)

List Other Special Requirements: _____
_____
_____
_____
_____
_____
_____

MDF

CABLE BUS SYSTEMS

For the most cost effective & reliable feeder systems contact MDF Cable Bus today!

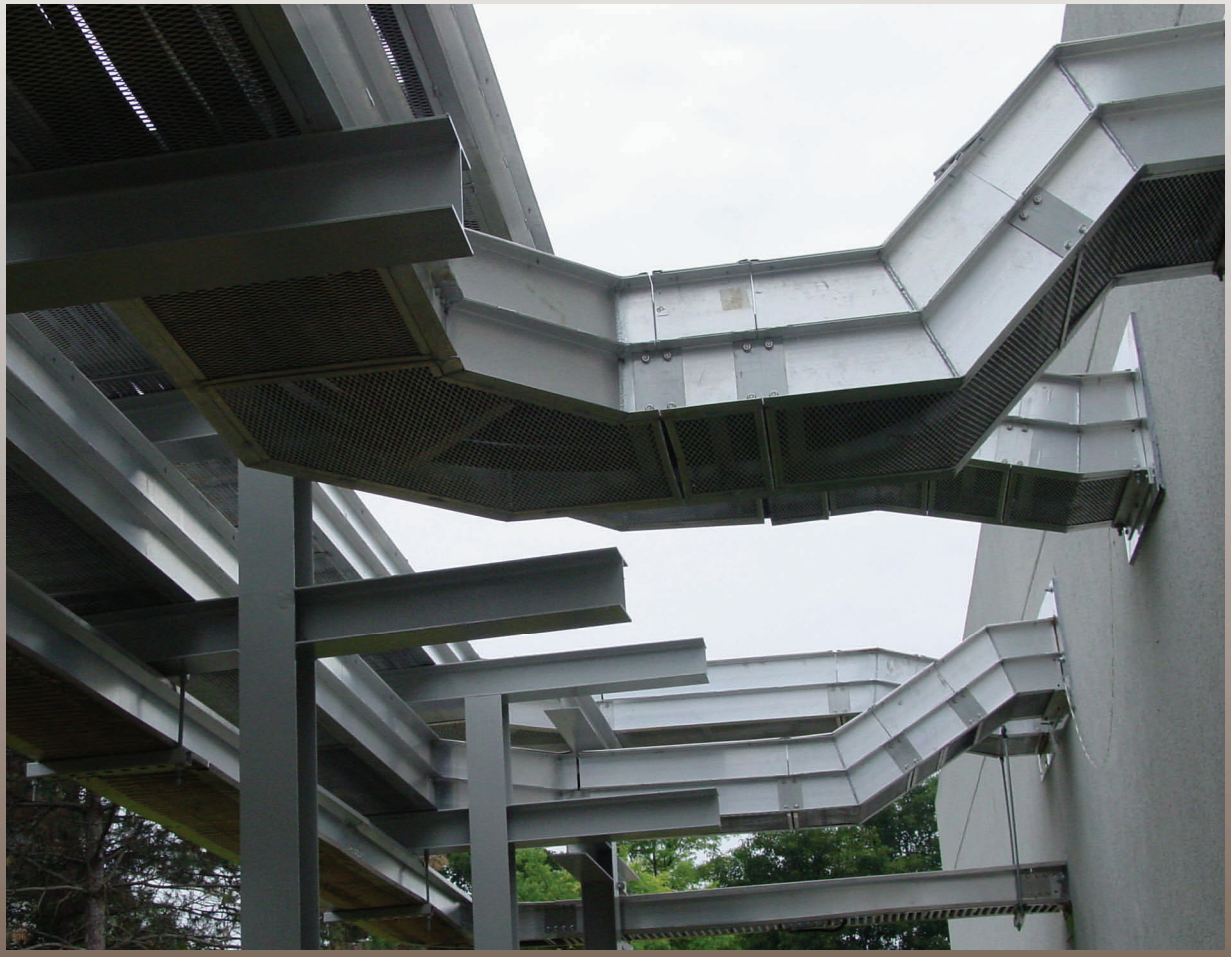

MDF Cable Bus Systems, LLC
4465 Limaburg Rd. ,Hebron, KY 41048

For Information call: 888-808-1655 email : sales@mdfbus.com